YouTube.com/ZachSettewongse

BE AWESOME
Like & Subscribe - Thanks!

Hammock Plans

Feel free to use these Hammock plans.
Send me a photo of your build Instagram.com/Settewongse
NOTE: I'm not an engineer so use and build at your own risk.

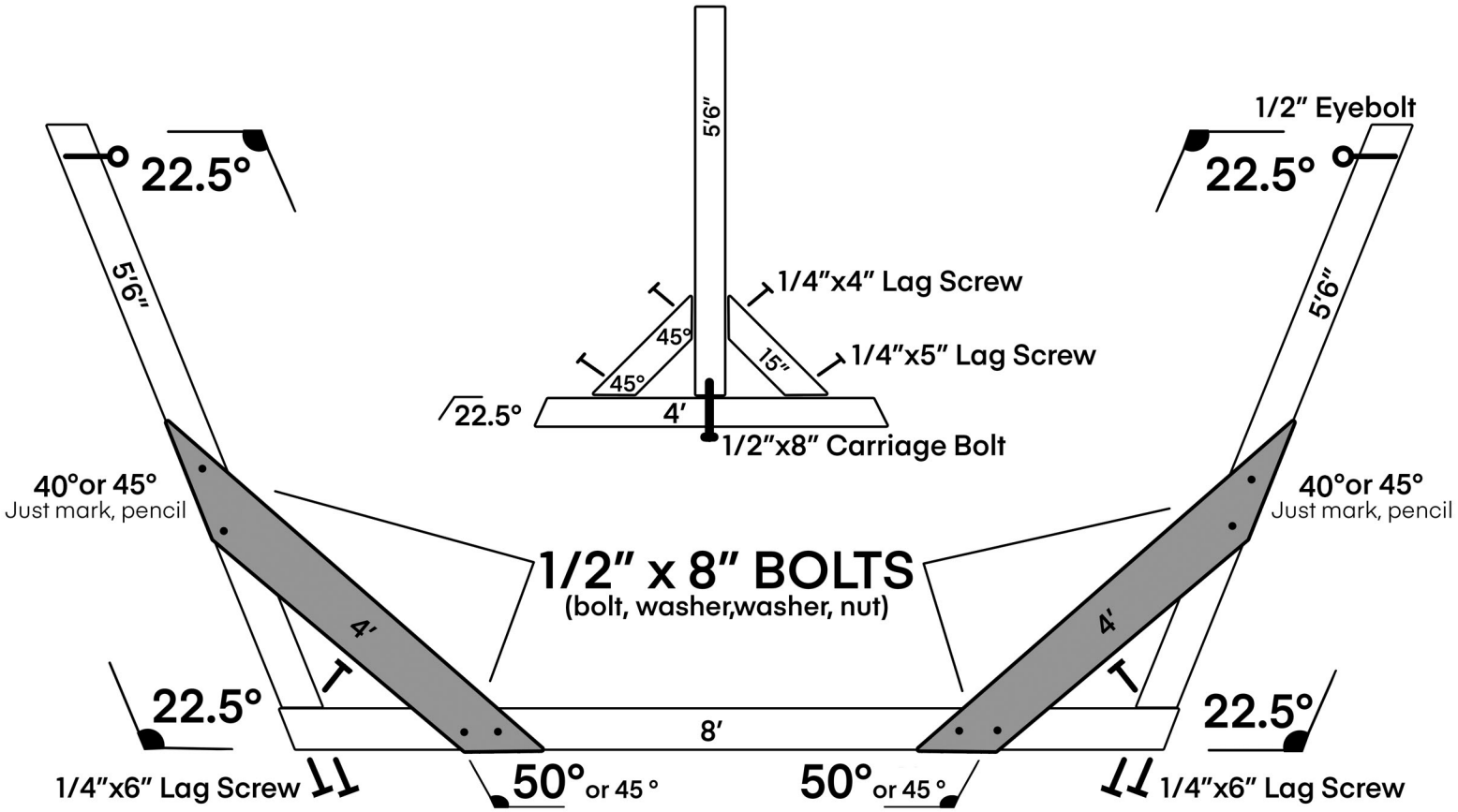

Parts List:

2"x6"x8	Qty 2
4"x4"x8'	Qty 3
4"x4"x8' Pressure Treated	Qty 1
(I used a 10' & cut two 4.5' pieces.)	
1/4"x4" Lag Screw	Qty 8
1/4"x5" Lag Screw	Qty 8
1/4"x6" Lag Screw	Qty 6
1/2"x8" Carraige Bolts	Qty 2
1/2" x8" Bolts	Oty 8
Washersfor 1/2" Bolts	Qty 24
Nuts for 1/2" Bolts	Qty 12
1/2"x4" Eyebolts	Qty 2